GAMMALUX
Lighting Systems
Perfection by Extrusion

G-Beam Series GB34RCTE

General Illumination - Recessed in Techstyle or Echelon Ceiling
Direct Distribution

Revision Date: Jun 2014

Click or scan QR code to view latest spec sheet.

CLICK FOR LED VERSION

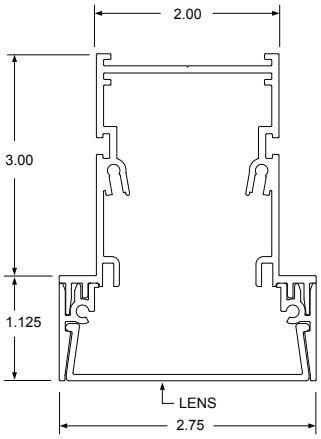

Fluorescent Lamping

Click photo to view product page

Page 2 Specifications
Page 3 Photometric / Revit files / Lens Options
Page 4 Mounting Details
Page 5 Standard Colors Chart

Gammalux Lighting Systems reserves the right to change details of fixture designs and construction at any time.

Product Overview (for complete specifications, see page 2)

Construction: Extruded aluminum housing is available in standard lengths up to 24'. Continuous runs have hairline joints with no light leak. Runs of fixtures can be built to lengths matching field conditions. Housing is designed for integration with Hunter Douglas Techstyle or Echelon ceiling system.

Electrical: Gammalux products are **UL** and **cUL** listed with quick electrical connectors and ballasts by OSRAM SYLVANIA or equal. Runs of fixtures are tested as a complete system prior to shipping.

Optical: Reflectors are formed to provide even washing of light across the lens. Lenses available in standard, medium and heavy diffusion.

Finish/Color: High quality paint finish in high gloss or semi-gloss. Custom colors available.

Packing and Shipping: Our packing, labeling and shipping systems ensure products arrive safely, ready to install.

Standard Nomenclature

Manufacturer
Gammalux

Cross Section (nom)
3.00" x **4**.00"

Housing
Recessed

No. of Lamps
1

Nominal Lamp Watts
28 (4'-T5)
54 (4'-T5HO)

Ballast Option
ERS Electronic Rapid Start <10% THD
DIM Dimming (consult factory)

Voltage
120, 277, UNIV

Mounting Method
REC Recessed

Sheilding
APL Clear Acrylic Prismatic Lens, Linear Prisms for High Performance *
ASL Acrylic Satin Lens
ASLMD Acrylic Satin Lens (Medium Diffuse)
ASLHD Acrylic Satin Lens (Heavy Diffuse)

Paint Colors
W White (Consult Color Chart on pg. 5 for other standard colors)
CCM Custom Color Match

Paint Finish
SG Semi-Gloss

GB34RCTE – 154T5HO – UNIV – ERS – 4' – REC/T1SW – ASL – WSG – XX

Application
Techstyle or **E**chelon

Cross Section Shape
Beam

Lamp Type
T5
T5HO

Fixture Length
Up to 24' single-piece housings available. Specify continuous runs in total length.

Ceiling System
T1SW 15/16" Flat T Bar Techstyle Ceiling
EMSW Echelon Main T
EXSW Echelon Cross T

Options
BPE Battery Pack EM. Kit
DL UL Damp Label
EMERG Emergency ckt.
GLR Fuse w/holder
2CKT Dual Circuiting

* When using high performance APL, a ghosted lamp image will be visible from some angles.

c UL us LISTED MADE IN U.S.A.

248 East Arrow Highway, San Dimas, CA 91773 Tel 909.599.9669 800.356.3275
Fax 909.599.5288 E-mail: info@gammalux.com

Gammalux products comply with ARRA Buy American requirements.

Specifications

Construction

Housing: Extruded aluminum body 2.75” wide x 4.125” high, 6063T5, 0.070” minimum thickness. Available in one piece, unbroken lengths up to 24’.

Joiner System: Automatic alignment, no loose parts, one tool to tighten two factory installed bolts for hairline seam. No light leaks. Fixtures that are built for continuous runs are assembled into a complete run and tested for fit and finish at the factory prior to being individually packed and shipped.

Mounting: Recessed into Hunter Douglas Contract Techstyle or Echelon ceiling system.

Electrical

Ballast: OSRAM SYLVANIA or equal Electronic Rapid Start ballast with less than 10% Total Harmonic Distortion is standard (specify **ERS**). Additional ballast options are available. UL listed wiring and components throughout. Housing wired with quick-connect plugs at all mating joints and individually tested. Max ballast cross section size 1.7” x 1.2”. Fixtures that are built for continuous runs are assembled into a complete run and tested with lamps at the factory prior to being individually packed and shipped. All fixtures bear UL & cUL Dry Location labels. Damp Location labels are available (specify **DL** in the options field).

Optical Performance

Reflectors: Shall be formed diffuse high reflectance aluminum.

Acrylic Prismatic Lens, Linear Prism: Clear acrylic shall be 90% transmissive or better. Prisms run parallel with lamps (specify **APL**) for high performance. *

Acrylic Satin Lens: Shall be 15% DR acrylic (specify **ASL**).

Acrylic Satin Lens, Medium Diffuse: Shall be 15% DR acrylic (specify **ASLMD**). Multiply ASL efficiency by .93.

Acrylic Satin Lens, Heavy Diffuse: Shall be 15% DR acrylic (specify **ASLHD**). Multiply ASL efficiency by .68.

Performance: Independent photometric laboratory testing - ITL or equal - is required. See following photometric information.

Finish

Housing assembly is electrostatically sprayed with high solids aliphatic two component polyurethane to an average thickness of 2 mils. over acid etching primer. High gloss or semi-gloss are standard. Specify **SG** for semi-gloss. Consult with factory for other finishes.

Packing and Shipping

Fixtures built for continuous rows and patterns are given a specific location identifier, clearly identified on factory layout drawings provided to installing contractor. Location identifier is printed on the fixture’s ID Label, protective wrapping and on each end of fixture carton. Shipping pallets are built with 2” clearance, extending beyond the length and width of cartons, providing shipping protection.

Approximate weight of 4' module is 10 lbs. including carton. Weight of shipping pallet and supplemental packing materials not factored in.

* When using high performance APL, a ghosted lamp image will be visible from some angles.

248 East Arrow Highway, San Dimas, CA 91773 Tel 909.599.9669 800.356.3275
Fax 909.599.5288 E-mail: info@gammalux.com
Gammalux products comply with ARRA Buy American requirements.

Photometric / Revit files

Standard Performance Fixtures with ASL shielding and T5 or T5HO lamping

(One lamp using Standard Diffuse lens. For Medium and Heavy diffuse lenses, use multiplier on page 2.)

IESNA: LM-63-2002
ISSUEDATE: 09/22/11
TEST: GB34RCTS-154T5HO-ERS-REC-ASL-WH-STD.IES
MANUFAC: GAMMALUX LIGHTING SYSTEMS
LUMCAT: GB34RCTS-154T5HO-ERS-REC-ASL-WH-STD
LAMP: Fluor. 54W 4' Silhouette T5 HO
OTHER: F54T5/HO

Summary Data

EFFICIENCY (Total):	**65.8%**
EFFICIENCY (Downlight):	**65.8%**
CIE CLASSIFICATION:	DIRECT
LUMENS/LAMP:	5000
NO. OF LAMPS:	1
LUMINOUS OPENING:	RECTANGULAR
Width:	0.21(Feet)
Length:	3.83
Height:	0.18
INPUT WATTS:	59

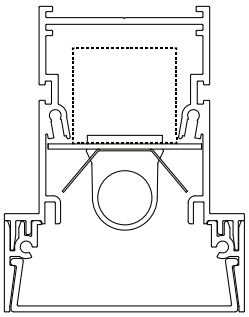

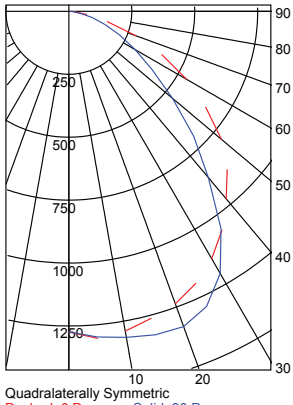

Quadralaterally Symmetric
Dashed: 0 Degrees Solid: 90 Degrees

High Performance Fixtures with APL shielding and T5 or T5HO lamping

(Ghosted lamp image is visible from some angles)

IESNA: LM-63-2002
ISSUEDATE: 09/22/11
TEST: GB34RCTS-154T5HO-ERS-REC-APL-WH-HP.IES
MANUFAC: GAMMALUX LIGHTING SYSTEMS
LUMCAT: GB34RCTS-154T5HO-ERS-REC-APL-WH-HP
LAMP: Fluor. 54W 4' Silhouette T5 HO
OTHER: F54T5/HO

Summary Data

EFFICIENCY (Total):	**81.3%**
EFFICIENCY (Downlight):	**81.3%**
CIE CLASSIFICATION:	DIRECT
LUMENS/LAMP:	5000
NO. OF LAMPS:	1
LUMINOUS OPENING:	RECTANGULAR
Width:	0.21 (Feet)
Length:	3.83
Height:	0.13
INPUT WATTS:	59

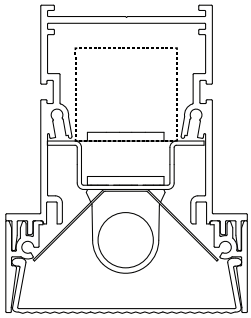

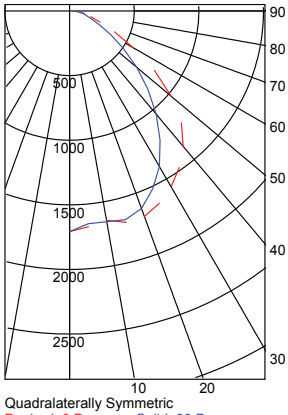

Quadralaterally Symmetric
Dashed: 0 Degrees Solid: 90 Degrees

Lens Options

Acrylic Satin Lens (ASL) | Acrylic Satin Lens, Medium Diffuse (ASLMD) | Acrylic Satin Lens, Heavy Diffuse (ASLHD)

Clear Acrylic linear prismatic lens (APL) will produce lamp images at certain angles.

248 East Arrow Highway, San Dimas, CA 91773 Tel 909.599.9669 800.356.3275
Fax 909.599.5288 E-mail: info@gammalux.com
Gammalux products comply with ARRA Buy American requirements.

Mounting Details

Factory Drawings: Fully dimensioned factory drawings will be provided upon receipt of purchase order.

15/16" T Bar - 1 11/16:
Specify **T1SW** code in catalog #

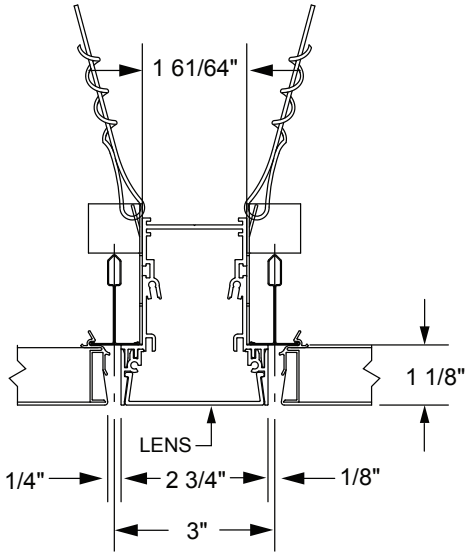

15/16" T Bar - 1 1/2:
Specify **T1SW** code in catalog #

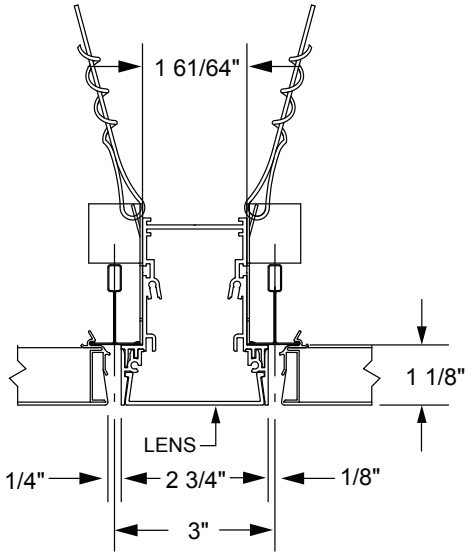

Echelon Main T Bar:
Specify **EMSW** code in catalog #

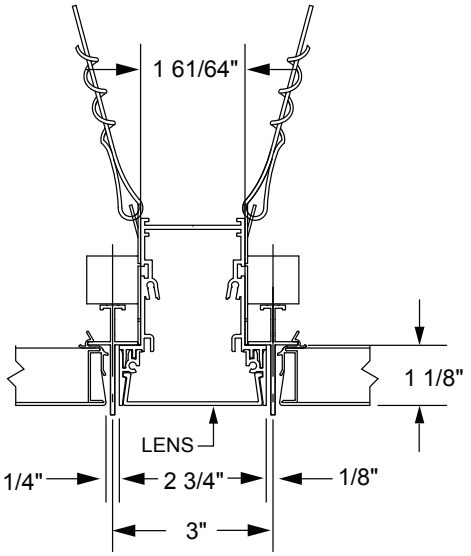

Echelon Cross T Bar:
Specify **EXSW** code in catalog #

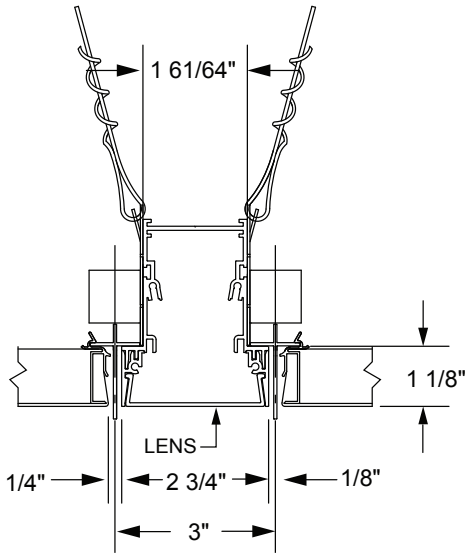

Standard Colors / Finishes

Due to variances in computer monitors and color printers, this page should be used for general reference only. For a sheet of physical color samples, please consult factory.

Semi Gloss Finish

White **(WSG)**

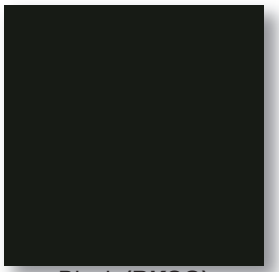
Black **(BKSG)**

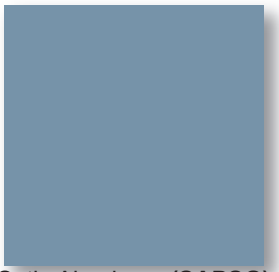
Satin Aluminum **(SAPSG)**

Due to variances in computer monitors and color printers, this page should be used for general reference only. For a sheet of physical color samples, please consult factory.

248 East Arrow Highway, San Dimas, CA 91773 Tel 909.599.9669 800.356.3275
Fax 909.599.5288 E-mail: info@gammalux.com
Gammalux products comply with ARRA Buy American requirements.