Click or scan QR code to view latest spec sheet

Click for: **Symmetric Version**

Revision Date: February 26, 2024

Gammalux Lighting Systems reserves the right to change details of fixture designs and construction at any time.

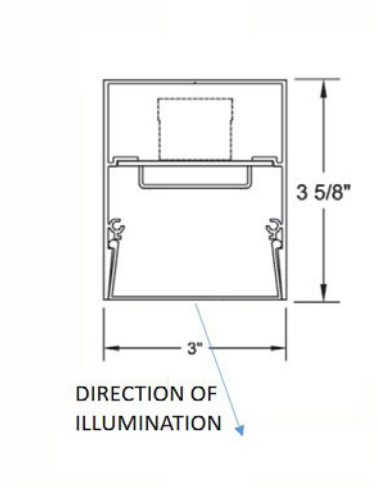

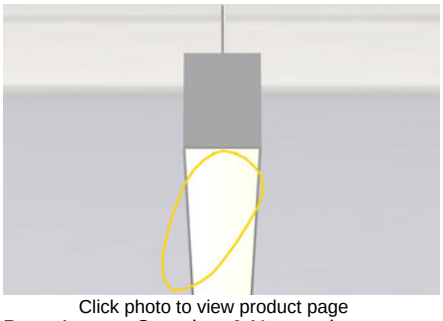

Click photo to view product page

Page 1: Overview & Nomenclature
Pages 2-3: Specifications
Pages 4-5: Photometric Info / Downloads
Page 6: Mounting Details
Pages 8-10: Custom Programming

Product Overview (for complete specifications, see pages 2 & 3) ******NEW****** See last page for APPROVED CUT RELEASE.

Quick Ship: Most product options are shippable within 2-3 weeks! **Check our Quick Ship Guide for details**.

Construction: ARRA, RoHS, REACH and Prop 65 compliant. Extruded aluminum housing for superior fit and finish. Runs and patterns have a single item # and can be built to field dims.

Unbroken Illumination: Continuous illumination in custom-length runs and patterns with illuminated corners.

Electrical: LED components by major manufacturers, may be upgraded in the field to increase energy efficiency. Fixtures can be fitted with specialty LED and control components (consult factory). Standard Output, High Output and Custom Output options available.

Optical: Asymmetric optic with continuous illumination in custom-length runs and patterns with illuminated corners.

Standard Nomenclature

Quick Ship Eligible — Most options 2-3 weeks^

Manufacturer
Gammalux

Series
Beam

Cross Section (nom)
3"x 4"

Output
S Standard Output
H High Output
C Custom Output (see addendum page)

Color Temp. (nom)
27 2700K **30** 3000K
30 3000K **35** 3500K
40 4000K
RGB & RGBW, consult factory

Driver
ZTV10 0-10V Dim to 10%
ZTV1 0-10V Dim to 1%
For all options, see next page

Length Option
N Nominal
S Specific

Mounting Method
C Cable
S Swivel Stem
SEQ CA Earthquake Stems/Fittings
SF Surface Ceiling
WM Wall Mount, Flush
WSP Wall Spacer, ½"

Default mounting finish is white semi-gloss; for others, add finish code (e.g. S24BKSG)

Paint Colors
W White (See color chart for other colors)
CCM Custom Color Match
For wood finishes, see addendum page

Paint Finish
H High Gloss
SG Semi-Gloss

GB34D2 – SL358 – UNIV – ZTV10 – 4'N – C24" – ASYSG – WSG –

Model
2nd Gen

Distribution
Direct

Lamp
LED

CRI**
8 for 80+
9 for 90+

Voltage
120V, 277V, UNIV

Run or Pattern
Specify total run length (i.e. **43' 5 1/8"**)
For illuminated patterns, follow overall length or dimensions with **L**, **T**, **X**, **U**, **RECT** or **SQ** (i.e. **43' 5 1/8" RECT** or **10' X 10' SQ**).
If overall length or dims are unknown, use TBD and follow with **L**, **T**, **X**, **U**, **RECT** or SQ (i.e. **TBD RECT** or **TBD SQ**).
Consult factory for complex or multi-plane patterns.

Suspension Length
Distance to top of fixture.
If not suspended, leave blank.

Shielding
ASYSG Asymmetric with SoftGlow effect

Options
BPE Battery Pack (4' section)
DL UL Damp Label
EMERG Emergency Ckt
2CKT Dual Circuiting
SBO Sensor By Others#

** 90+ CRI increases watts nom. 14.5%. # Sensor by Others (consult factory).

248 East Arrow Highway, San Dimas, CA 91773 Tel 909.599.9669 | 800.356.3275
Fax 909.599.5288 E-mail: info@gammalux.com
Gammalux products comply with ARRA Buy American requirements

Specifications (continued on next page)

Electrical

Output: Standard (**S**) and high (**H**) options deliver a pre-set lumen package (see chart below). Custom-programmed output (**C**) is specified as LPF, WPF or % of High Output (see Custom Programmed Output page).
Static Driver: eldoLED Optotronic* programmable driver, wired for static operation (**DVR**).
0-10V Dimming: eldoLED Optotronic* programmable driver, wired for 0-10v control and dimming to 10% (**ZTV10**) or to 1% (**ZTV1**).
Step Dimming: Generic step dimming driver, two hot inputs for 100% and 50% output (**SD2**).
DALI Dimming: Generic DALI driver with two loose control wires exiting fixture at power feed location (**DALI**).
Lutron Dimming: Hi-Lume dim to 1% EcoSystem with Soft-On, Fade-to-Black (**LDE1**).
White Emitter: Nichia 757G emitters* binned within 3 MacAdam ellipses in Osram or Gammalux proprietary array. 90+ CRI option with extended lead time (CRI code **9**) results in nominal 14.5% drop in efficacy; increase calculated watts 14.5%.
Battery Pack: Bodine BSL10T3* (**BPE**). 4W max input, 10W initial output, delivers min. 27% of High Output value per 4' length.
LED System: 70% lumen output (L70) at max 85 degrees C calculated at >60k hours. Fixtures are shipped with anti-static gloves to minimize the risk of damage to LEDs during installation. 5 year limited warranty.
Sensors: Sensors are as specified, confirmed by Gammalux prior to factory quote. Examples are Enlighted Micro Sensor, Lutron Athena Wireles Node, Lutron Vive, Wattstopper FS-205.
Upgrade Capability: LED assemblies can be replaced in the future with the latest factory-provided and fully warranted components. On-board sensors, control interface devices and alternate LED components may be specified (consult factory). Fixtures bear UL & cUL Dry Location label. Damp Location label available (**DL**).
*Subject to availability; may be substituted by Gammalux. Components and specifications may be changed without notice.

LUMENS AND WATTS BY OUTPUT OPTION AND LED COLOR @ 80+ CRI*											
STANDARD OUTPUT LED						HIGH OUTPUT LED					
ASYMMETRIC LENS (ASY/SG) DELIVERS: **764.6 LPF**						ASYMMETRIC LENS (ASY/SG) DELIVERS: **1016.7 LPF**					
CCT	2700 K	3000 K	3500 K*	4000 K	5000 K	CCT	2700 K	3000 K	3500 K*	4000 K	5000 K
WATTS / FT.	6.3	5.9	5.8	5.7	5.4	WATTS / FT.	8.6	8.2	8	7.8	7.4
* IES FILES WERE CREATED USING 3500 K DIODES @ 80+ CRI. WATTAGE IS MULTIPLIED BY 1.06 FOR 2700 K, 1.02 FOR 3000 K , .98 FOR 4000 K AND .93 FOR 5000 K DIODES TO MAINTAIN THE SAME DELIVERED LUMENS THROUGHOUT ALL COLOR TEMPERATURES. FOR 90+ CRI, INCREASE WATTAGE BY 14.5%. SEE ADDENDUM FOR CUSTOM PROGRAMMING.											

Construction

Housing: ARRA, RoHS, REACH and Prop 65 compliant. Extruded aluminum body 3.00" wide x 3.62" high, 6063T5, 0.070" min thickness. Each housing is 12' max unless longer housings are pre-coordinated with the factory to reduce joints and installation labor. Fixtures are built per approved factory drawings and tested as a complete system at the factory. Continuous runs and patterns are ordered, built and shipped with a single item #. Fixtures ordered as individuals are not designed to be joined together in the field.

Joiner System: Automatic alignment, no loose parts, one tool to tighten factory installed bolts for hairline seam. No light leaks.

Lamping: Patterns are fully illuminated. Runs ordered in Specific Length (Length Option **S**) will be built to the exact dimension shown on signature-approved shop drawings. Runs ordered in Nominal Length (Option **N**) may be factory-adjusted to accomodate standard mounting positions or grid centers. Factory drawings will show all dimensions of mounting and power feed locations. Fixtures built to less than 4' may require remote driver installation - consult factory.

Mounting: Aircraft cable is 7x7 stranded stainless steel with top end stopper fitting. Lower end is welded and ground for easy insertion into adjustable cable gripper (**C**). Feed cord is straight, white 3/C SVT or SJT #18 AWG. Stems are 3/8" schedule 40 pipe with top swivels (**S**). California UBC compliant stems with internal safety cables available (**SEQ**). Direct to surface mounting available (**SF**). Housing can be mounted direct to wall (**WM**). Wall Spacer mounting (**WSP**) allows projection from wall of 3.50" to meet ADA requirements.

Specifications (continued)

Optical

Reflectors: Shall be formed diffuse high reflectance aluminum.
Asymmetric optic: Shall be 100% DR acrylic snap-in shield with SoftGlow effect, providing nominal 20 degree offset illumination (**ASY/SG**).

Finish

High solids aliphatic two component polyurethane high (**H**) or semi-gloss (**SG**), avg. thickness of 2 mils. Mounting components and power feed are white unless specifically ordered otherwise. Antimicrobial paint option (code **A**).

Packing and Shipping

Fixtures built for continuous rows and patterns are given a specific location identifier, clearly identified on factory layout drawings, the fixture's ID Label, protective wrapping and on each end of fixture carton. Shipping pallets are built with 2" clearance, extending beyond the length and width of cartons, providing shipping protection.

Approx. weight of 4' module is 10 lbs. including carton. Weight of pallet and supplemental packing materials not factored in.

Instructions

Surface mounting option (**SF**) requires the LED arrays to be removed from the fixture in order to access the mounting holes. Anti-static gloves are provided to minimize the potential for damage to the LEDs during installation.

Photometric Reports for

STANDARD OUTPUT FIXTURES

FIXTURE USES ASY/SG AND 3500K LEDs @ 80+ CRI

IESNA:	LM-63-2002
ISSUEDATE:	04/21/2023
TEST:	L042311301-01, GPD3
TESTLAB:	LIGHT LABORATORY, INC.
MANUFAC:	GAMMALUX LTG SYS
LUMCAT:	GB34D2SL358ASY/SG
LAMPS:	192 WHITE LEDs

MAX. UGR (NO WALL)	24.6
EFFICACY (TOTAL):	131.4 LPW
DISTRIBUTION % UP:	0%
DISTRIBUTION % DN:	100% (764.6 LPF)
CIE CLASSIFICATION:	DIRECT

LUMINOUS OPENING:	RECTANGULAR
WIDTH:	3 in.
LENGTH:	48.5 in.

INPUT WATTS:	23.31 per 4'

As viewed from directly below

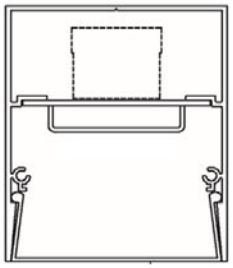

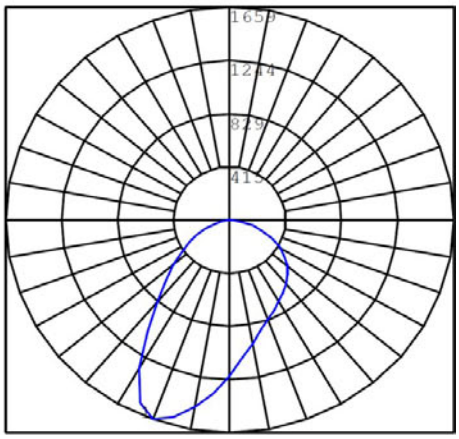

Photometric Reports for

HIGH OUTPUT FIXTURES

FIXTURE USES ASY/SG AND 3500K LEDs @ 80+ CRI

IESNA:	LM-63-2002
ISSUEDATE:	04/21/2023
TEST:	L042311301-01, HO, GPD3
TESTLAB:	LIGHT LABORATORY, INC.
MANUFAC:	GAMMALUX LTG SYS
LUMCAT:	GB34D2HL358ASY/SG
LAMPS:	192 WHITE LEDs

MAX. UGR (NO WALL)	25.6
EFFICACY (TOTAL):	126.6 LPW
DISTRIBUTION % UP:	0%
DISTRIBUTION % DN:	100% (1016.7 LPF)
CIE CLASSIFICATION:	DIRECT

LUMINOUS OPENING:	RECTANGULAR
WIDTH:	3 in.
LENGTH:	48.5 in.

INPUT WATTS:	32.12 per 4'

As viewed from directly below

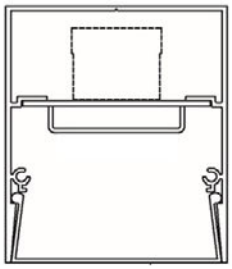

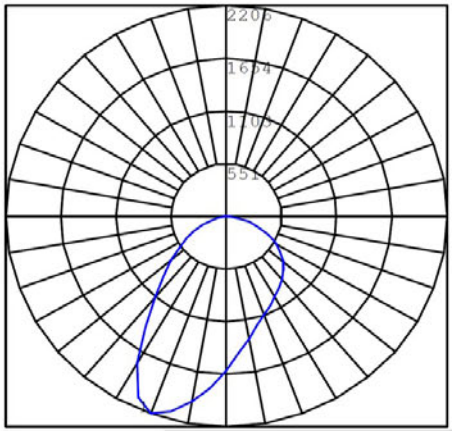

Mounting Details

Factory Drawings: Fully dimensioned factory drawings will be provided for approval or record. Click here for complete written instructions and videos.

Cable Mount:
Specify **C** code in catalog #

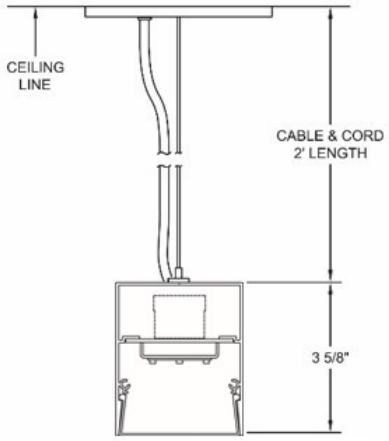

Swivel Stem Mount:
Specify **S** code in catalog #

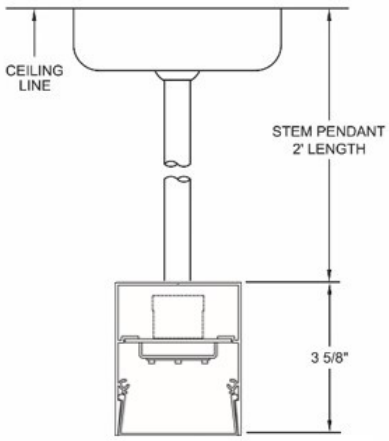

CA Earthquake Stem Mount:
Specify **SEQ** code in catalog #

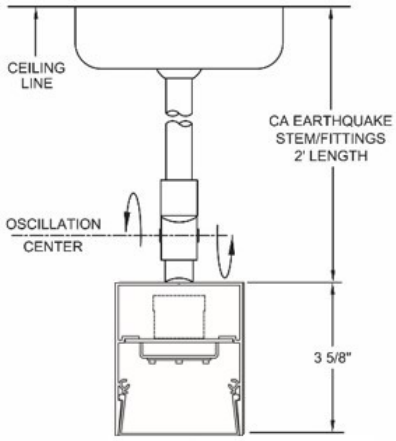

Surface Mount:
Specify **SF** code in catalog #

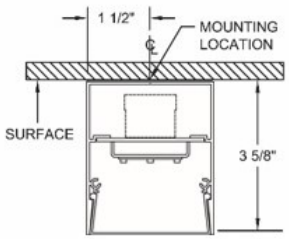

Wall Mount:
Specify **WM** code in catalog #

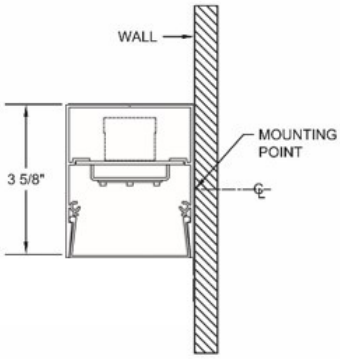

Wall Spacer Mount:
Specify **WSP** code in catalog #

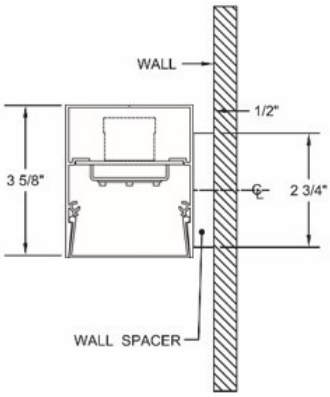

Gammalux Lighting Systems reserves the right to change the details of fixture design and construction at any time.

248 East Arrow Highway, San Dimas, CA 91773 Tel 909.599.9669 | 800.356.3275
Fax 909.599.5288 E-mail: info@gammalux.com
Gammalux products comply with ARRA Buy American requirements

Custom Programmed Output

Custom Programmed Output can be specified to produce approximate Delivered Lumens per Foot, Percentage of High Output Value or Maximum Watts per Foot.

Delivered Lumens Per Foot

Gammalux deals only in delivered lumens per foot. When working to match or exceed a competitor product's Lumens Per Foot package, be sure you are looking at their Delivered (through the lens) lumens per foot, not their System (bare board) lumens per foot.

In the Gammalux item #, use **C** as the Output designator and add a fixture description stating the required Lumens Per Foot value (ie: if you need 600 lumens per foot delivered by the fixture, the line note would read "Program = 600 LPF").

Percentage of High Output Value

If the required delivered lumens per foot are not known, run lighting calculations using our High Output IES file and identify the percentage of increase or decrease required to produce the correct lighting in the space.

In the Gammalux item #, use **C** as the Output designator and add a fixture description stating the required percentage of decrease from our High Output value (ie: for 60% of our High Output value, the line note would read "Program = 60% of High Output").

Maximum Watts Per Foot

In the Gammalux item #, use **C** as the Output designator and add a fixture description stating the required Maximum Watts per Foot (ie: if you need the fixtures capped at a maximum of 7 watts per foot, the line note would read "Program = 7 WPF").

For all three methods, custom programming capability is currently 25-200% of our High Output value. For requirements outside of this range, consult factory.

248 East Arrow Highway, San Dimas, CA 91773 Tel 909.599.9669 | 800.356.3275
Fax 909.599.5288 E-mail: info@gammalux.com
Gammalux products comply with ARRA Buy American requirements

Wood Finishes

Fixture housings are powder coated with a base finish, baked, then wrapped in a film with the decorative grain pattern. Baking the housing again allows the grain to become embedded into the powder coated finish. This is not a decal or veneer. Additional lead time and cost increases apply. Consult factory for pricing. Swatches are scaled accurately for 8.5" x 11" page.

FINISH CODE: KPI

FINISH CODE: MED

FINISH CODE: HCH

FINISH CODE: WAL

FINISH CODE: AOK

FINISH CODE: FWG

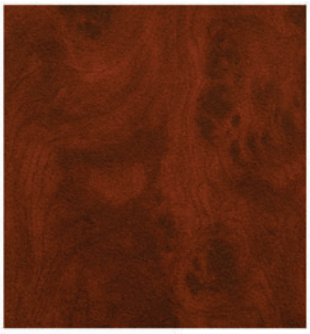
FINISH CODE: MH1

FINISH CODE: MH2

SAMPLE FIXTURE WITH WOOD FINISH

DUE TO VARIANCES IN MONITORS AND PRINTERS, ACTUAL FINISHES MAY APPEAR DIFFERENT FROM SWATCHES.

248 East Arrow Highway, San Dimas, CA 91773 Tel 909.599.9669 | 800.356.3275
Fax 909.599.5288 E-mail: info@gammalux.com
Gammalux products comply with ARRA Buy American requirements

Approved Cut Release option

If offered for Approved Cut Release in the Gammalux factory quote, the product in the accompanying purchase order is authorized by the GC to be released to production without the need for factory drawings for approval.

I confirm that:

- all ordering options are clearly noted (highlighted, boxed, written in, etc.) on page 1 of this fixture cut sheet
- quoted leadtime begins upon Gammalux's confirmation that the P.O. and marked cut sheet match their quote.
- the order will be released to production and a "record only" drawing will be provided prior to product shipment
- changes after Gammalux's release to production will result in a minimum 25% change fee which increases as production progresses.

General Contractor_____

GC's authorized Signature (or stamp below)_____

Signatory's printed name_____